DC113

Inbouw rolcontact met vertikale rol, wit, sabotagelus, ±30 cm kabel, NC.

Roller Plunger Recessed Contact

The DC113 roller plunger contact saves installation time while providing reliable security of a magnetic contact. Drill only one hole to mount the DC113 roller plunger. The entire magnetic contact is housed in an economical single unit. Recessed mounting hides the contact within the frame of the door it protects.

Reliable Functioning

GE's roller plunger wheel is designed to operate with a smaller surface area in contact with the door. This reduces the likelihood that dirt and other debris will clog the mechanism. The specially designed ABS plastic housing protects the roller wheel from pressure exerted by swelling wood that could cause ball plungers to jam in place.

Applications

Use the DC113 to protect a variety of doors and windows. It can also be used to protect high-value objects on display, such as antiques, books or works of art by placing the object on the recessed contact.



Details

- Ideal for residential doors
- Works as plunger or ball switch
- Flanges for reliable, positive retention
- Spacers, mounting screws included

DC113

Inbouw rolcontact met vertikale rol, wit, sabotagelus, ±30 cm kabel, NC.

Technische specificaties

Algemeen

Type toepassing	Verzonken montage
Type contact	NC
Aansluiting	4 wires, 2 m

Bedraad / draadloos

Bedraad / draadloos	Bekabeld

Fysiek

Afmetingen contact / sensor	19 x 44 mm (Ø x L)
Kleur	Beige

Regelgeving

Certificering	INCERT
Standaarden	VSO

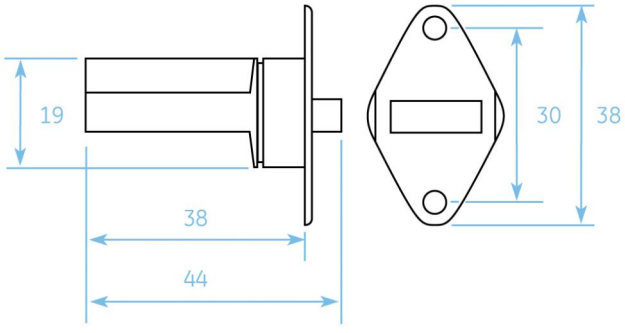

Als een bedrijf van innovatie behoudt Kidde Global Solutions zich het recht voor productspecificaties zonder kennisgeving te wijzigen. Ga voor de nieuwste productspecificaties online naar nl.firesecurityproducts.com of neem contact op met uw verkoopvertegenwoordiger.

Last updated on 13 August 2026 - 11:05