DC102R4.7

Opbouwcont. met schroefaansl., wit, afstand ±18 mm, NC. Incl. 2 weerstanden

Easy Installation

The DC102-series are ideal for residential and commercial applications where terminal connections are preferred. The unit features positive clamping terminals with anti-rotation lugs and captured screws with combination heads. These features allow for easy, quick installations.

Comprehensive range

The range includes wide gap, SPDT and biased versions for higher security. This makes it one of the most popular contacts available in the industry today.

Durability and dependability

These high performance magnetic contacts have been designed to facilitate installation and ensure durability and dependability. Most are conservatively rated at 10,000,000 cycles, guaranteeing a long life. Every reed connection is hand soldered and each magnetic contact is tested before they leave the factory.

High quality components and materials

Reed legs are plated with rhodium or ruthenium, and hermetically sealed in dry nitrogen. This offers superior protection against sticking and provides a moisture free environment therefore preventing corrosion.



Details

- Ideal for residential and commercial
- Convenient surface mounting
- Versions with built-in resistors available

DC102R4.7

Opbouwcont. met schroefaansl., wit, afstand ±18 mm, NC. Incl. 2 weerstanden

Technische specificaties

Algemeen

Type toepassing	Oppervlaktemontage
Type contact	4K7 end-of-line resistor
Aansluiting	Screw

Bedraad / draadloos

Bedraad / draadloos	Bekabeld
Werkingsafstand	18 mm (max.)

Fysiek

Fysieke afmetingen	63 x 12 x 19 mm
Kleur	Wit

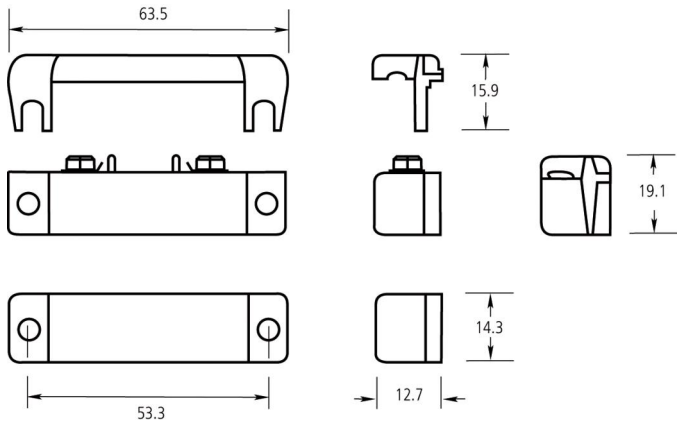

Als een bedrijf van innovatie behoudt Kidde Global Solutions zich het recht voor productspecificaties zonder kennisgeving te wijzigen. Ga voor de nieuwste productspecificaties online naar nl.firesecurityproducts.com of neem contact op met uw verkoopvertegenwoordiger.

Last updated on 13 August 2026 - 11:05