KE-AS3015W-CM

Excellence Series intelligent addressable sounder/visual alarm, ceiling mount

General

The innovative Excellence range of intelligent addressable devices offers advanced features for reliability and peace of mind. Coupled with features for ease of installation and maintenance on new fire detection systems, it's a perfect match for exceptional overall performance.

The KE-AS3015W-CM is a WHITE bodied, addressable ceiling mount sounder & visual alarm device (VAD) for Excellence series fire systems. They are connected over a 2-wire loop and are loop powered. They are compatible with automatic synchronisation controlled from the CIE (control panel).

Installation

For ease of system planning, Excellence notification devices share a first fix base with Excellence point detectors. This allows for standardised cabling with less cabling issues, and allows devices to be interchanged without rewiring should requirements change. Optional installation accessories to support surface conduit entry, trim skirts address tags and address labels are available to suit multiple applications.

To assist with the installation and commissioning process, a multitude of features ensure that the device is easily and properly inserted into the base, securely connected to the loop and that it functions perfectly. A local multi-coloured LED indicator helps to visualise device status locally without requiring access to the fire panel.

Configuration & Operation

All functional programming is controlled from the CIE and can be changed on the fly without access to the device.

Should the loop be heavily loaded, all Excellence notification devices offer a unique "Battery assisted activation" feature allowing the device to draw its activation power from 3 x CR123 batteries that may be optionally fitted to the device. Using batteries protects the device loop from possible overload which may put the system at risk, and allows for as many as 128 notification devices to be fitted to any Excellence loop. When batteries are used they are automatically supervised buy the device, with ample warning time when batteries require replacing. Under standard operating conditions batteries should provide more than 5 years of support without requiring replacement.

Safety & Security

Automatic daily self testing ensures that when the device is activated, everything works as expected. Pre-activation self testing ensures that a warning is raised before an event takes place, minimising the risk when notification is required.



Détails

- Standard first fix base shared with point detectors for ease of planning, logistics and installation
- Base lock, address tag, trim skirt and surface cabling support for easy installation in all conditions
- Loop powered with battery assisted activation allowing up to 128 devices per loop
- 32 selectable tones at 4 selectable volume levels that can be reconfigured from the CIE
- 3 selectable VAD power levels that can be reconfigured from the CIE
- Multi-stage evacuation support for application flexibility
- Pre-and post activation self testing ensuring maximum safety
- Automatic synchronisation
- Tri-colour diagnostic LED indicator for fast commissioning and fault finding support

KE-AS3015W-CM

Excellence Series intelligent addressable sounder/visual alarm, ceiling mount

Spécifications techniques

Général

Compatibilité	Kidde Commercial Excellence Systems
Méthode d'adressage	DIL switch
Contrôle	Activated, Battery level, Continuously self-checking, Fault

Électrique

Type de bloc d’alimentation	Batteries, Alimenté en boucle
Batteries	3 x CR123 (optional)
Tension de fonctionnement	17 to 29 VDC
Tension de communication	4 to 11 V pulsed
Consommation de courant	250 µA (Quiescent) 1.4 mA (Activated - from the loop with batteries installed) Refer to installation sheet for consumption values when only loop powered

Sirène

Niveau de sortie	55 to 102 dB(A) - Tone dependent
Level Adjustment (ajustement du niveau)	4 levels
Fréquence	User selectable
Tonalités sélectionnables	32
Synchronisation	Supported
Nombre de phase	3

VAD

Couleur	Red
Évaluation	C-3-6 (Low) / C-3-7.5 (Mid) / C-3-9 (High)
Couverture de sol	< 63.6 m² total < 40.5 m² covering squares
Fréquence du flash	0.5 Hz (1 flash every 2 s)
Synchronisation	Supported

Caractéristiques physiques

Dimensions physiques	111 x 87 mm (Ø x H)
Poids net	300 g
Couleur	Blanc (RAL 9016)
Type de montage	Assemblage sur socle
Position de montage	Ceiling
Hauteur de montage	Up to 3 m
Base de fixation	Shallow
Matériel	PC / ABS
Texture	Smooth

Environnement

Protégé contre le vandalisme	Non
Température de fonctionnement	-10 to +55°C
Température de stockage	−25 to +75°C
Humidité relative	10 to 93% (noncondensing)
Environnement	Intérieur
Indice de protection	IP21C

Régulateur

Conformité	CE, REACH, RoHS 3, WEEE
Certification	CPR
Normes	EN54-3, EN54-23

Produits compatibles

Catégorie	Référence	Description
Module de détection	KE-ASA-AUXW	
Module de détection	KE-DB3010W	

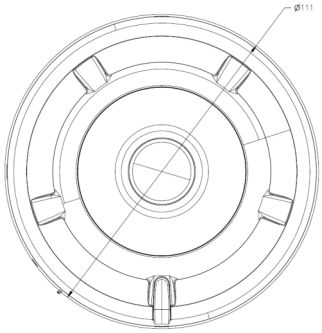

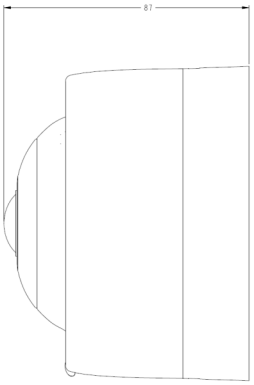

KIDDE COMMERCIAL

En tant que société d'innovation, Kidde Global Solutions se réserve le droit de modifier les spécifications des produits sans préavis. Pour les dernières spécifications du produit, visitez le site web be.firesecurityproducts.com ou contactez votre représentant commercial.

Last updated on 25 August 2026 - 8:52