1-B6782-190

EExe GRP Junction Box for Tank Roof

General

The 1-B6782-190 is a FLP junction box for installation on tank roofs. It is supplied with three M20 cable glands, and allows for electrical connection between the retractable cable and the linear heat detection (LHD) cable.

Application (LHD)

One significant application for linear heat sensor cable is floating roof storage tanks. As installation in this application provides significant challenges, the 1-B6782-190 junction box helps to simplify the installation.

On a floating roof tank the roof itself is designed to move up and down as the tank is filled or emptied, preventing any vapour space in the tank. The difficulty is maintaining an electrical connection between the top of the tank and the moving tank roof.

This junction box is installed on the tank roof allowing termination of the sensor cable which runs around the rim seal of the floating roof. Three cable glands are provided which allow electrical connection from the junction box on the tank top as well as termination of both ends of the sensor cable.

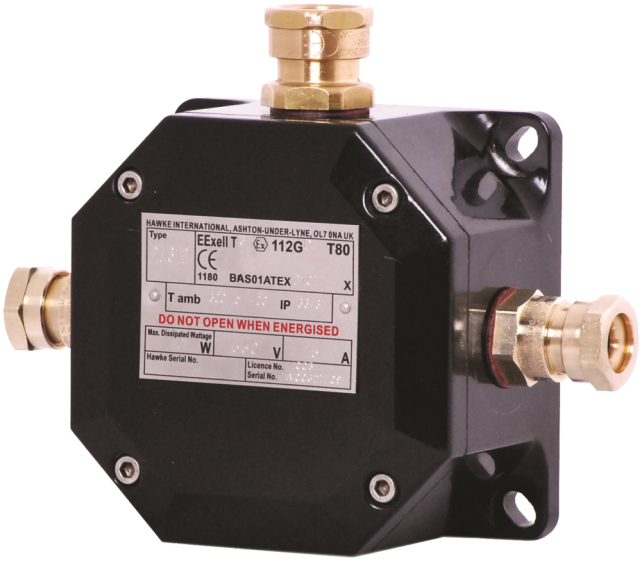

Détails

- Increased safety Exe Dual Certified
- Flame retardant to IEC 92.1 Clause 2.38
- High ingress protection rating
- Suitable for use in Zone 1, 2, 21 and 22 applications
- Supports M20 cable glands
- Supplied with: - 3 x Exd IP66 rated brass cable glands (M20) - 2 x Fibre washers - 3 x Lock nuts (M20) - 4 x Exd cable connectors - 1 x Exd earth connector

1-B6782-190

EExe GRP Junction Box for Tank Roof

Spécifications techniques

Électrique

Bornes	4 x 2.5 mm

Caractéristiques physiques

Dimensions physiques	120 x 120 x 74 mm (W x H x D)
Poids net	800 g
Couleur	Noir
Entrées de câble	3 x M20
Matériel (boîte)	Polyester renforcé de verre

Environnement

Température de fonctionnement	-60 to +75°C
Environnement	Exd, Intérieur, Extérieur
Indice de protection	IP66/IP67 to IEC/EN 60529

Régulateur

Normes	Baseefa06ATEX0117X

Mechanical

Fixing holes	4 x 7 mm @ 102 mm² CRS
Cable size (outer sheath cable dia)	2 x 3.2 to 8 mm (outer sheath cable dia) 1 x 10 to 14.3mm

Environmental

Deluge protection	DTS01
Temperature class / ambient	T6 40°C

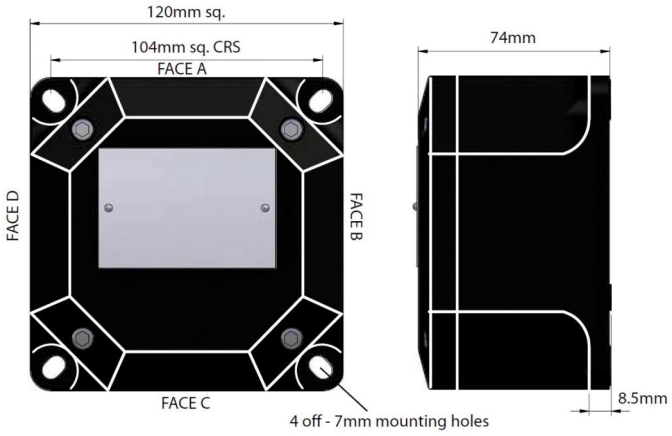

KIDDE GLOBAL SOLUTIONS

En tant que société d'innovation, Kidde Global Solutions se réserve le droit de modifier les spécifications des produits sans préavis. Pour les dernières spécifications du produit, visitez le site web be.firesecurityproducts.com ou contactez votre représentant commercial.

Last updated on 30 July 2026 - 10:56