ZP7-IB2-P

Ziton series point detector base with isolator

Product overview

The ZP7-IB2-P isolator base protects Ziton addressable fire detection loops against short circuits. Up to 127 base isolators may be connected to each loop when this isolator is used in enhanced mode. For legacy systems the ZP7-IB2-P also support the old operating modes and are therefore backwards compatibility with legacy isolators.

Just as with a standard base, the ZP7-IB2-P allows the detector to be removed or replaced without disconnecting loop wiring from the detector.

Regulatory Loop Protection

The ZP7-IB2-P is intended for use on Class-A, return loop wiring configurations. By regulation a zone of no more than 32 fire alarm devices must be located between isolators. In the event of a short circuit fault the isolators on either side of the fault disconnects the section of cable between them. Devices inside the zone get disconnected, but devices outside the disconnected zone continue to operate normally.

The ZP7-IB2-P meets the recommendations for loop monitoring in local codes like BS5839-1.

Isolator design

With the improved design of the ZP7-IB2-P it is now possible to ensure that no devices are disconnected from the isolated section of cable, that could be a small as the cable between two isolator bases. Every detector may be fitted with an isolator base, ensuring maximal device operation even in the event of a cable short circuit.

Additional advantages

Adding ZP7-IB2-P isolator bases has no affect on device addressing for that loop as they require no addressing. A selectable lock facility is provided to lock the detector into the base preventing removal without a special tool.

Situated on the base moulding, an yellow LED indicator flashes when the isolator is activated.

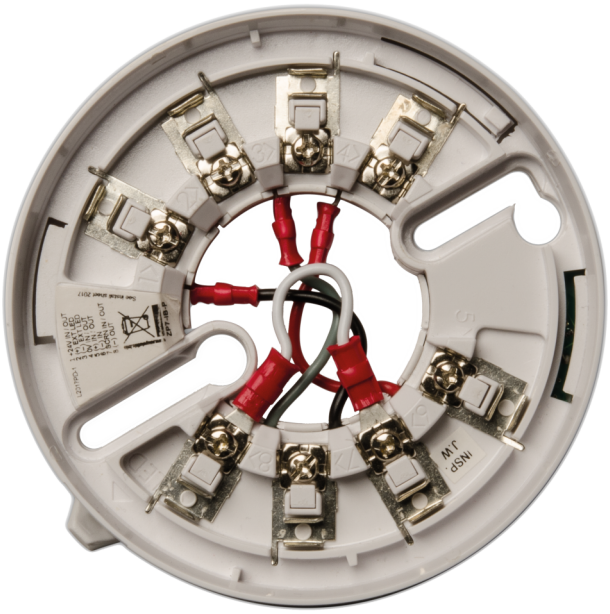

Details

- Provides short circuit loop protection for up to 127 devices on the loop
- LED indication of isolation activation
- Optional base lock facility
- Complies to the recommendation of BS5839-1
- Backwards compatible with legacy base and standalone isolators

ZP7-IB2-P

Ziton series point detector base with isolator

Technical specifications

General

Status indication	LED (yellow)
Compatibility	All ZP addressable systems
Connectivity	2-wire loop
Addressing method	No addressing required

Electrical

Power supply type	Loop powered
Operating voltage	16 to 20 VDC
Current consumption	180 µA (quiescent) 230 µA (activated - legacy mode) 4 mA (activated - enhanced mode)
Cable specification	Class-A return loop (loop resistance <75 Ω)
No. of cable cores	2
Terminals	8

Detection

Monitoring	Short circuit

Isolation

Type	Negative line break
Quantity per loop	≤16 (legacy mode) ≤127 (enhanced mode)
Series resistance	<0.060 Ω
Impedance requirements	<16 Ω (between panel and first isolator) <16 Ω (between adjacent isolators) <16 devices between adjacent isolators

Physical

Physical dimensions	109 x 23 mm (Ø x H)
Net weight	79 g
Colour	Polar white
Mounting type	Surface mount
Cable entries	1
Material (body)	Moulded thermoplastic

Environmental

Vandal proof	No
Operating temperature	-10 to +55°C
Storage temperature	-10 to +55°C
Relative humidity	10 to 95% noncondensing
Environment	Indoor
IP rating	IP21

Regulatory

Compliancy	CE, REACH, RoHS 2, WEEE
Certification	CPR, EN54-17

Compatible products

Category	Reference	Description
Detection device	Z-AUXD-2P	Deep base mounting, polar white
Detection device	ZP720-3P	Ziton series addressable heat detector
Detection device	ZP730-2P	Ziton series addressable optical detector
Detection device	ZP732-2P	Ziton series Addressable Dual Detector (Optical & Heat), Polar White
Detection device	ZX832-3P	Ziton series addressable multisensor (optical / heat)
Notification device	ZP755-COV-P	Ziton series Detector Base Cover (Polar White)

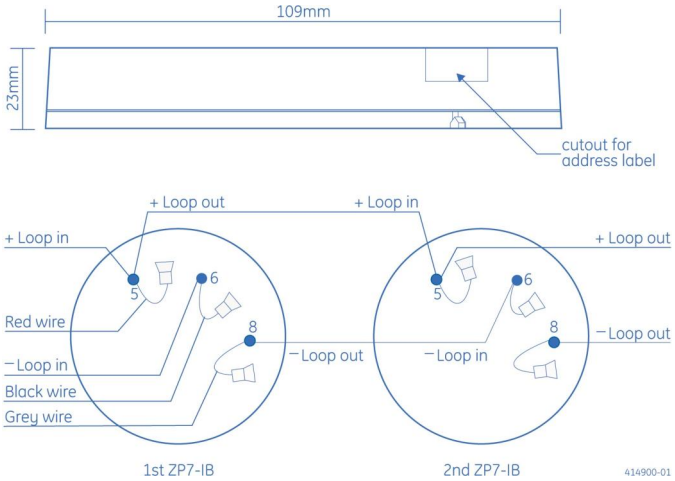

As a company of innovation, Kidde Global Solutions reserves the right to change product specifications without notice. For the latest product specifications, visit firesecurityproducts.com online or contact your sales representative.

Last updated on 23 February 2026 - 16:14