# KE-AS3015W-CM

**Excellence Series intelligent addressable sounder/visual alarm, ceiling mount**

## General

The innovative Excellence range of intelligent addressable devices offers advanced features for reliability and peace of mind. Coupled with features for ease of installation and maintenance on new fire detection systems, it's a perfect match for exceptional overall performance.

The KE-AS3015W-CM is a WHITE bodied, addressable ceiling mount sounder & visual alarm device (VAD) for Excellence series fire systems. They are connected over a 2-wire loop and are loop powered. They are compatible with automatic synchronisation controlled from the CIE (control panel).

## Installation

For ease of system planning, Excellence notification devices share a first fix base with Excellence point detectors. This allows for standardised cabling with less cabling issues, and allows devices to be interchanged without rewiring should requirements change. Optional installation accessories to support surface conduit entry, trim skirts address tags and address labels are available to suit multiple applications.

To assist with the installation and commissioning process, a multitude of features ensure that the device is easily and properly inserted into the base, securely connected to the loop and that it functions perfectly. A local multi-coloured LED indicator helps to visualise device status locally without requiring access to the fire panel.

## Configuration & Operation

All functional programming is controlled from the CIE and can be changed on the fly without access to the device.

Should the loop be heavily loaded, all Excellence notification devices offer a unique "Battery assisted activation" feature allowing the device to draw its activation power from 3 x CR123 batteries that may be optionally fitted to the device. Using batteries protects the device loop from possible overload which may put the system at risk, and allows for as many as 128 notification devices to be fitted to any Excellence loop. When batteries are used they are automatically supervised buy the device, with ample warning time when batteries require replacing. Under standard operating conditions batteries should provide more than 5 years of support without requiring replacement.

## Safety & Security

Automatic daily self testing ensures that when the device is activated, everything works as expected. Pre-activation self testing ensures that a warning is raised before an event takes place, minimising the risk when notification is required.




## Details

- Standard first fix base shared with point detectors for ease of planning, logistics and installation
- Base lock, address tag, trim skirt and surface cabling support for easy installation in all conditions
- Loop powered with battery assisted activation allowing up to 128 devices per loop
- 32 selectable tones at 4 selectable volume levels that can be reconfigured from the CIE
- 3 selectable VAD power levels that can be reconfigured from the CIE
- Multi-stage evacuation support for application flexibility
- Pre-and post activation self testing ensuring maximum safety
- Automatic synchronisation
- Tri-colour diagnostic LED indicator for fast commissioning and fault finding support

# KE-AS3015W-CM

**Excellence Series intelligent addressable sounder/visual alarm, ceiling mount**

## Technical specifications

### General

| | |
|---|---|
| Compatibility | Kidde Commercial Excellence Systems |
| Addressing method | DIL switch |
| Monitoring | Activated, Battery level, Continuously self-checking, Fault |

### Electrical

| | |
|---|---|
| Power supply type | Batteries, Loop powered |
| Batteries | 3 x CR123 (optional) |
| Operating voltage | 17 to 29 VDC |
| Communication voltage | 4 to 11 V pulsed |
| Current consumption | 250 µA (Quiescent)<br>1.4 mA (Activated - from the loop with batteries installed)<br>Refer to installation sheet for consumption values when only loop powered |

### Sounder

| | |
|---|---|
| Output level | 55 to 102 dB(A) - Tone dependent |
| Output level adjustment | 4 levels |
| Frequency | User selectable |
| Selectable tones | 32 |
| Synchronization | Supported |
| No. of stages | 3 |

### VAD

| | |
|---|---|
| Colour | Red |
| Rating | C-3-6 (Low) / C-3-7.5 (Mid) / C-3-9 (High) |
| Floor coverage | < 63.6 m² total<br>< 40.5 m² covering squares |
| Flash frequency | 0.5 Hz (1 flash every 2 s) |
| Synchronization | Supported |

### Physical

| | |
|---|---|
| Physical dimensions | 111 x 87 mm (Ø x H) |
| Net weight | 300 g |
| Colour | White (RAL 9016) |
| Mounting type | Base mount |
| Mounting position | Ceiling |
| Mounting height | Up to 3 m |
| Mounting base | Shallow |
| Material | PC / ABS |
| Texture | Smooth |

### Environmental

| | |
|---|---|
| Vandal proof | No |
| Operating temperature | -10 to +55°C |
| Storage temperature | −25 to +75°C |
| Relative humidity | 10 to 93% (noncondensing) |
| Environment | Indoor |
| IP rating | IP21C |

### Regulatory

| | |
|---|---|
| Compliancy | CE, REACH, RoHS 3, WEEE |
| Certification | CPR |
| Standards | EN54-3, EN54-23 |

### Compatible products

| Category | Reference | Description |
|---|---|---|
| Detection device | KE-ASA-AUXW | |
| Detection device | KE-DB3010W | |

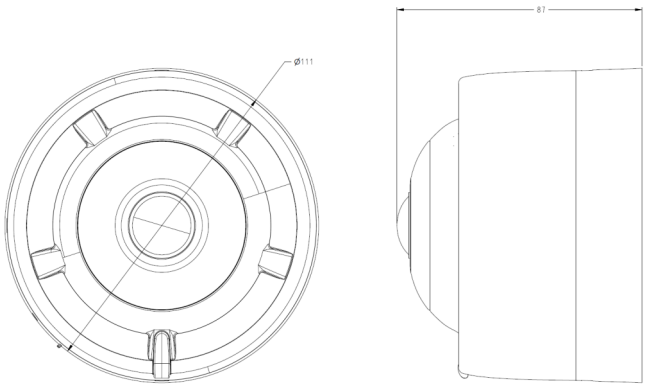


KIDDE COMMERCIAL

As a company of innovation, Kidde Global Solutions reserves the right to change product specifications without notice. For the latest product specifications, visit firesecurityproducts.com online or contact your sales representative.

Last updated on 25 August 2026 - 8:52